Success Stories ...2016

January, 2016

All India Coordinated Research Project on
Farm Implements and Machinery
ICAR - Central Institute of Agricultural Engineering
Nabi Bagh, Berasia Road, Bhopal - 462038, India
http://www.ciae.nic.in

Extension Bulletin No. **CIAE/FIM/2016/191**

Year : 2016

Compilation and editing : **Dr. C. R. Mehta**, Project Coordinator (FIM)
Dr. Uday R. Badegaonkar, Sr. Scientist, TTD
Dr. R. K. Tiwari, Chief Technical Officer (FIM)
Er. Babasaheb S. Gholap, Research Associate (FIM)

Published by : Coordinating Cell
AICRP on Farm Implements and Machinery
ICAR - Central Institute of Agricultural Engineering
Nabi Bagh, Berasia Road
Bhopal - 462038, India
Telefax : 0755-2733385, 2521163
E-mail: cr.mehta @ icar.gov.in

Printed at : Neo printers
17, Sector – B, Bhopal
Govindpura, Bhopal
Ph: 0755-6900660

Tractor Mounted Vertical Belt Paired Row Potato Planter

Anoop Dixit, G S Manes, Arshdeep Singh and Aseem Verma

Punjab Agricultural University, Ludhiana

Introduction

In India, potato crop is cultivated in 1.97 million hectare area with a production of 41.55 million tonne. It is cultivated in 0.087 million ha area in Punjab state with an annual production of 2.18 million tonne (2013-14). The major potato cultivation areas in Punjab are Jalandhar, Hoshiarpur, Ludhiana and Patiala. The commonly grown varieties in the region are Kufri Chandarmukhi, Kufri Pukhraj, Kufri Badshah, Kufri Jyoti and Kufri Bahar. One of the main problems faced by potato growing farmers is high labour requirement for planting, earthing up and inter-culture operations. The labour requirement is as high as 300-320 man-days/ha for potato planting and earthing up operations. Non-availability of adequate labour during the planting season in winter necessitates the mechanization of potato planting.

Potato planter performs the functions of furrow opening, seed metering, seed placement at proper depth and formation of ridges to cover seed tubers. Two, three or four row semi-automatic potato planters have been developed, commercialized and are being used by the farmers. The capacity of such machine is low (0.15 ha/h) because of slow speed of operation as feeding of potato is done manually. Automatic potato planters with picker wheel type mechanism are commercially available. They have higher missing with non graded seeds and result in slippage of tubers when held by actuating finger. Therefore, the feasibility evaluation of a tractor mounted paired row vertical belt type automatic potato planter was carried out by Punjab Agricultural University, Ludhiana to overcome the limitations of semi-automatic and picker wheel type potato planters.

Traditional Practice of Potato Planting

Potatoes are usually grown from small tubers, called seed potatoes. Seeds selected are free from diseases. Either a small tuber as a whole or a piece of a large tuber containing at least one eye is planted. Large tubers are treated with Emison and then cut into pieces with 2-4 'eyes' on each piece. Potatoes require good sun light to grow and prefer a slightly acidic soil with a pH of 5.8-6.5. The soil is dug to a depth of 250-380 mm and covered with a mixture of soil and compost (50-75 mm) at the bottom. Seeds are planted into soil and depth of soil allows good root and foliage development. As the potatoes grow up, more soil and compost are added. Potato planting is generally done manually in rows spaced at 500-600 mm with 100-200 mm plant to plant spacingThe semi-automatic planters are being used by farmers for sowing small potatoes or tubers with eyes in ridges on mechanized farms.

Salient Features of the Machine

The tractor operated vertical belt paired row automatic potato planter consists of two shovel type furrow openers, two vertical rubber belts fitted with metal cups in paired rows for picking potato tubers (Fig. 1). The arrangement of cups on the belt is in zig-zag manner. Number of cups per belt are 40. The planter is equipped with multi-speed gears to adjust the seed spacing with the help of chain and sprocket. There is a provision to adjust row to row spacing from 600 to 710 mm and plant to plant spacing from 200 to 280 mm. The power to the metering mechanism is provided through ground wheel having diameter of 640 mm and power transmission gear ratio of 9:2. Planter also has the provision to spread fertilizer. Three persons are required to operate the machine. The specifications of the machine are given in Table 1 and detail drawings are shown in Fig. 2.

Fig. 1. Vertical belt paired row automatic potato planter.

Table 1 Brief specifications of tractor operated vertical belt paired row potato planter

S. No.	Parameters	Specifications
1.	Power source (tractor), kW	33.6
2	Overall dimensions (lxbxh), mm	1820x1700x1860
3.	Seed metering mechanism	Vertical belt cup type
4.	No. of vertical belts	2 (in pair)
5.	No. of cups per vertical belt	40 (two parallel rows in zig-zag manner)
6.	Distance between pairs, mm	120
7.	No. of rows	2
8.	Row to row spacing, mm	600-710
9.	Plant to plant spacing, mm	200-280 (adjustable)
10.	Ground wheel diameter, mm	640

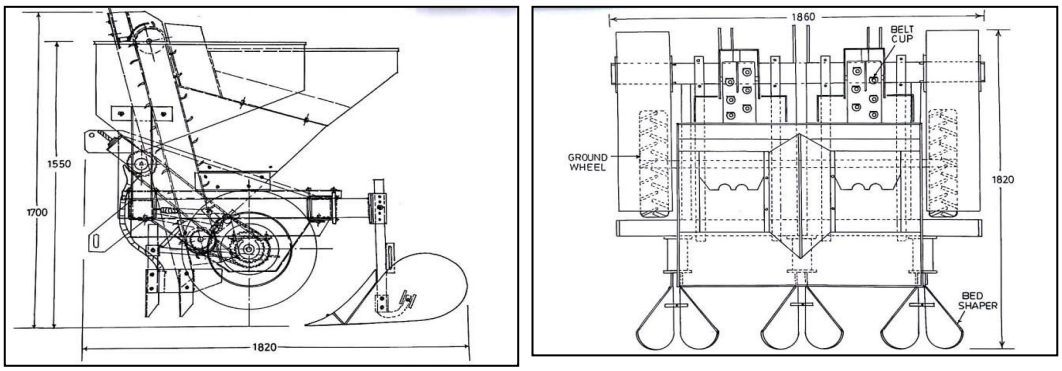

Fig.2.Side and top views of vertical belt paired row automatic potato planter.

Performance of Vertical Belt Paired Row Potato Planter

The tractor (34 kW) operated vertical belt paired row potato planter was evaluated at PAU, Ludhiana by planting potato variety Kufri Jyoti on beds under controlled traffic in sandy loam soil (Figs. 3 and 4). The performance of the planter was compared with picker wheel type automatic potato planter as control and results are given in Table 2.

Fig. 3. Seed placement by vertical belt paired row automatic potato planter.

Fig. 4. A view of germinated potato crop sown with vertical belt paired row automatic potato

The field capacity of the paired row planter was 0.24 ha/h at an average forward speed of 2.5 km/h. Top width, bed height and bottom width of the beds formed were 300, 200 and 400 mm, respectively. The seed rate was 2.75 t/ha for vertical belt paired row automatic potato planter as compared to 2.91 t/ha for picker wheel type automatic potato planter. The missing, doubling and seed damage for vertical belt paired row planter were 3.33, 1.50 and 1.50%, respectively whereas these values were 5.0, 18 and 10%, respectively for picker wheel type automatic planter. The germination count for vertical belt paired row planter was 4.25 per meter length as compared to 7.3 per meter length for picker wheel type automatic potato planter. This may be due to more doubling in case of picker wheel type automatic potato planter. The approximate cost of vertical belt paired row potato planter was Rs. 85000/- and the cost of operation was Rs. 2703/ha. There was no saving in cost of operation of the machine as compared to picker wheel type automatic potato planters but it helped farmers in saving the quality potato

seed from damage. There was saving of 47.31% in cost of operation as compared to revolving magazine type semi-automatic potato planter.

Table 2. Field performance of tractor operated vertical belt paired row type and picker wheel type potato planters

S.No	Parameters	Vertical belt paired row type	Picker wheel type
1	Tractor power, kW	34.00	34.00
2	Seed rate, t/ha	2.75	2.91
3	Width of coverage, m	1.35	1.25
4	Speed of operation, km/h	2.50	3.00
5	Field capacity, ha/h	0.24	0.25
6	Missing, %	3.30	5.00
7	Doubling, %	1.50	18.00
8	Damage, %	1.50	10.00
9	Germination count/m row (20days)	4.25	7.3

Farmers Feedback

The machine was demonstrated to the extension functionaries of various departments during various extension programmes and also at farmer's fields at Hazara and Chohka villages of Jalandhar district of Punjab and at Ladhowal farm of PAU covering an area of approximately 120 ha. As per farmers' feedback, the machine could cover 0.24-0.25 ha/h and fuel consumption using the machine was 4.5-5.0 l/h. No breakdown of the machine was observed during operation. Farmers were satisfied with the planting performance of the machine and the subsequent crop stand. The farmers suggested about need of superior material of belt to avoid cracks. The need was felt of even size of tubers for less missing and four row units for higher coverage.

Status of the Technology

Presently, the machine is commercially available and more than 35 units of the machines have been sold in Punjab state.

Manufacturers Addresses

M/s Swan Agro
622, Industrial area-B
Ludhiana – 141003 (Punjab)
Tel: 9317750109, 0161- 4346000
Fax: 0161- 2532622
E-mail: new-swan@usa.net
http://www.swanagro.com

M/s Guru Nanak Agriculture Implements Manufacturers
G.T. Road Bye Pass, Near Focal Point,
Jalandhar – (Punjab)
Tel: 0181 - 144001 2602670
Fax: 0181 - 6451670
Mob: 9855894015, 9814973573, 9646600040
E-mail: gurunanakagri@vsnl.net
http://www.gurunanakagriculture.com